Profile Specification

Millwork 360

Attention:

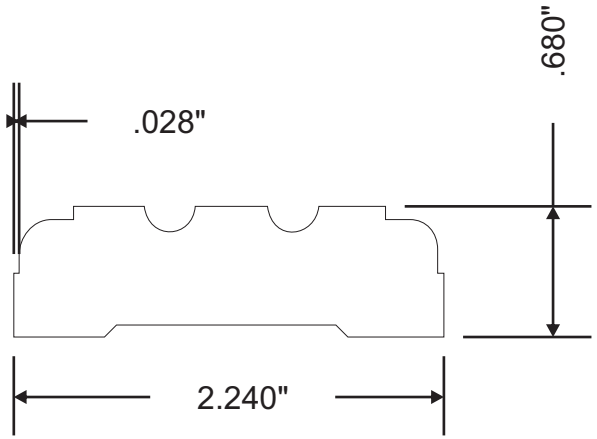

Customer	Part #	Specie	Dimensions	Notes
	MW3-20473		11/16" x 2-1/4"	
Revised			Approval Signature	